Blade Line Diverter

- **Heavy duty wear blade with UHMW polyethylene blade seal**
- **Air operated, requires 90-100 psig clean, dry plant air**
- **Diverts product at a 30° angle**
- **Designed for vacuum or pressure systems**

Application

The Schenck Process Blade Line Diverter features a heavy duty wear blade with a synthetic polymer insert to seal against the valve end plates. The insert creates a tight seal reducing contamination possibilities.

The Blade Line diverts product at a 30° angle and is designed for use in vacuum or pressure systems directing material from two sources into one destination (or reverse).

Schenck Process offers three versions of Blade Line Diverters:

- Cast iron with a pneumatic actuator in line sizes from 2-1/2” to 6”
- Cast iron with a manual actuator in line sizes from 2-1/2” to 6”
- Fabricated, air actuated model
  - line sizes 2-1/2” to 6” in stainless steel (8” and 10” are optional in stainless steel)
  - line sizes 8” and 10” in carbon steel

Features

- Heavy duty wear blade with UHMW polyethylene blade seal
- Air operated, requires 90-100 psig clean, dry plant air
- Standard service temperature up to 160 °F maximum
- Maximum air pressure is 15 psig

Options

- 4-way, NEMA 4 or single or double NEMA 9 solenoid air control valve requires 120 VAC, 60 Hz, single phase, 6.2 – 6.3 watt power source
- NEMA 4 or NEMA 9 position proof switch is equipped with 2 N.O. and 2 N.C. switches rate at 10 Amp continuous
- Fabricated 304 or 316 stainless steel construction

Blade Line Diverter Dimensions

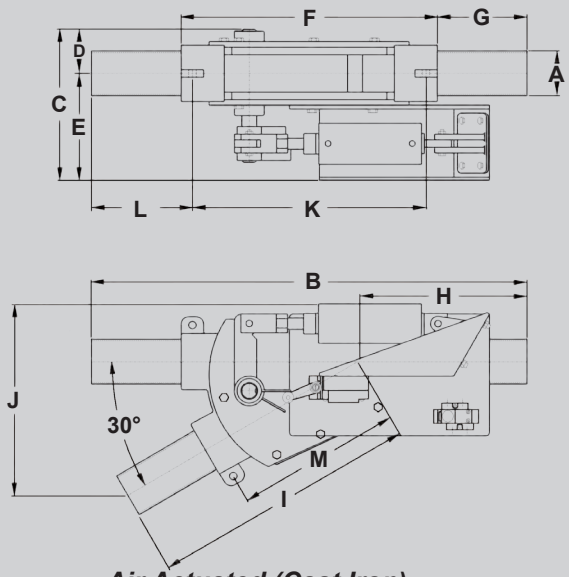

Air Actuated (Cast Iron)

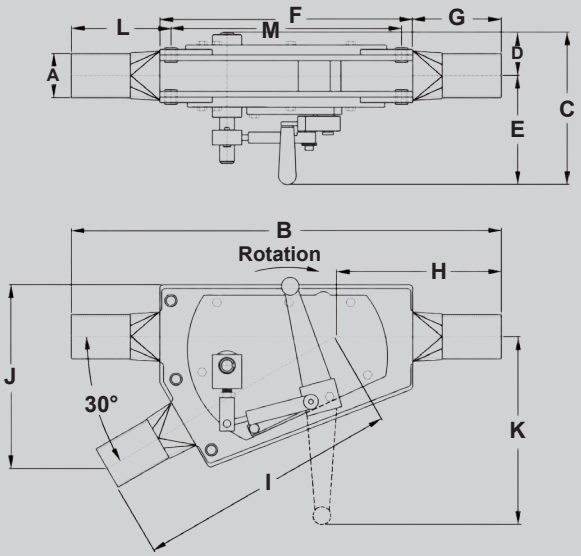

Manual (Fabricated)

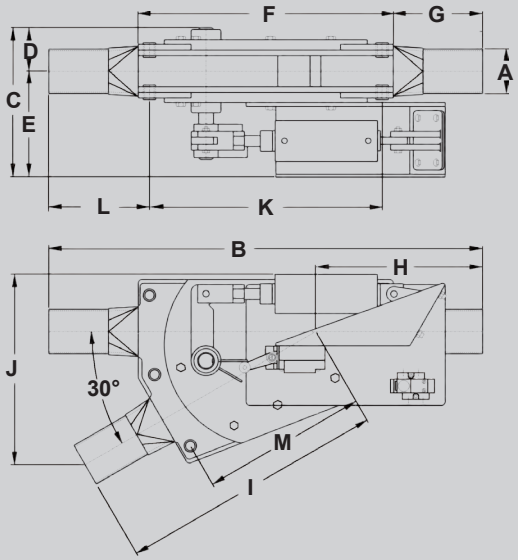

Air Actuated (Fabricated)

schenckprocess

Blade Line Diverter Dimensions

Air Actuated (Cast Iron)

Model	Dimensions (inches)													Cyl.	Weight (lbs.)
	A	B	C	D	E	F	G	H	I	J	K	L	M		
2.5	2.5	32.13	10.06	2.94	7.13	17.13	7.5	12.81	19.31	13.56	15.63	8.25	11.06	2-1/2 x 4	114
3	3	29.13	10.06	2.94	7.13	17.13	6	11.31	17.81	12.19	15.63	6.75	11.06	2-1/2 x 4	117
4	4	28.5	11.06	3.44	7.63	20.5	4	9.63	18.88	13.81	18.5	5	13.88	2-1/2 x 4	159
5	5	33.5	12.31	4	8.31	18.75	7.38	9.88	23.63	15.81	16.88	8.31	15.31	3 x 5	191
6	6	33.5	12.31	4	8.31	18.75	7.38	9.88	23.63	15.81	16.88	8.31	15.31	3 x 5	222

Manual (Fabricated)

Model	Dimensions (inches)													Weight (lbs.)
	A	B	C	D	E	F	G	H	I	J	K	L	M	
2.5	2.5	29.13	10.31	2.94	7.38	17.13	6	11.19	17.88	10.75	12.69	6.75	15.63	96
3	3	29.13	10.31	2.94	7.38	17.13	6	11.19	17.88	10.75	12.69	6.75	15.63	98
4	4	32.5	11.31	3.44	7.88	20.5	6	11.69	20.81	13.97	14.31	7	18.5	124
5	5	33.5	12.38	4	8.38	18.75	7.38	10	23.5	15.38	15	8.13	17.25	143
6	6	33.5	12.38	4	8.38	18.75	7.38	10	23.5	15.38	15	8.13	17.25	148

Air Actuated (Fabricated)

Model	Dimensions (inches)													Weight (lbs.)
	A	B	C	D	E	F	G	H	I	J	K	L	M	
2.5	2.5	29.13	10.06	2.94	7.13	17.13	6	11.19	17.88	12.19	15.63	6.75	11.13	103
3	3	29.13	10.06	2.94	7.13	17.13	6	11.19	17.88	12.19	15.63	6.75	11.13	105
4	4	32.5	11.06	3.44	7.63	20.5	6	11.69	20.81	13.47	18.5	7	13.81	136
5	5	33.5	12.56	4.25	8.31	18.75	7.38	10	23.5	15.38	17.25	8.13	15.38	158
6	6	33.5	12.31	4.25	8.69	18.75	7.38	10	23.5	15.38	17.25	8.13	15.38	163
8	8	59.5	15.75	5.88	9.88	35.5	12	20	39.5	25	34	12.75	26.75	342
10	10	60	18.75	7.38	11.38	36	12	18	42	27.5	34.5	12.75	29.25	420