schenckprocess

510 Blower Package

- **Pneumatic conveying blower package for industrial applications**
- **Motor horsepower up to 100 HP**
- **Available with line sizes ranging from 2” to 5”**
- **Intake filter and silencer assembly**

Application

The Schenck Process 510 Series of pressure style blower packages is intended to be used in industrial applications where sanitary design is not a concern. These packages have formed angle legs and top bases and an integrally mounted intake filter and silencer assembly. 510 packages are available with several different pumps and with motor horsepower up to 100 HP.

Specifications

- Carbon steel painted horizontal base
- Pressure relief valve set at 15 PSI
- Carbon steel drive guard
- Pressure gauge
- Check valve
- Expansion joints
- Carbon steel intake filter/silencer combination with pressure differential indicator
- Positive displacement blower
- Single set point pressure switch set at 12 PSI
- V-belt drive assembly

schenckprocess

510 Blower Package Dimensions

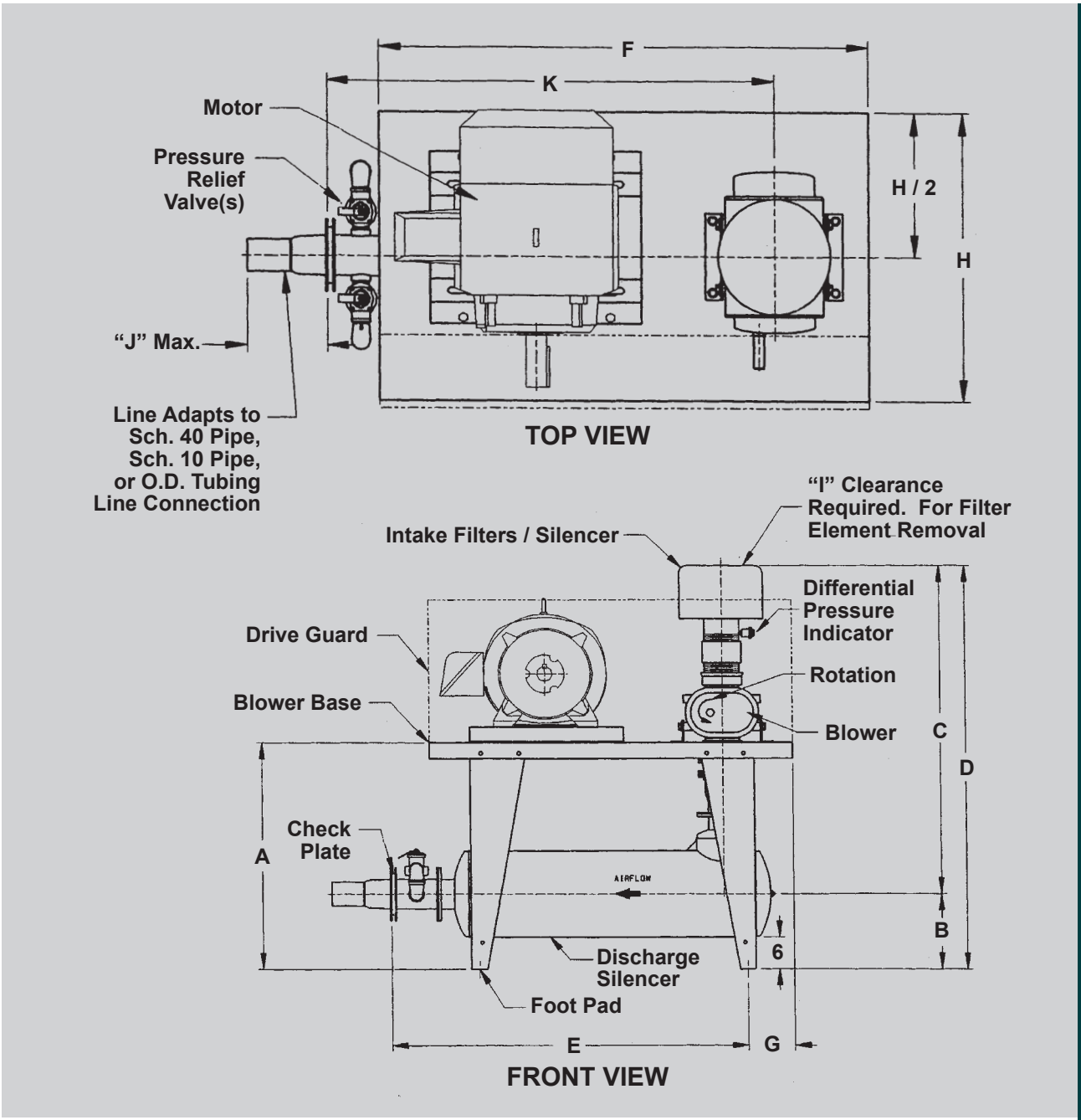

Model	Blower	H.P.	Dimensions (inches)											Weight (lbs.)
			A	B	C	D	E	F	G	H	I	J	K	
513	4506	50	37-1/2	13-1/8	62	75-1/8	53-1/8	56	9-1/4	36	11	10-1/8	48	1666
514	4509	75	37-1/2	13-1/8	56-1/2	69-5/8	52	56	8-1/2	36	11	10-1/8	48	2015
515	4512	100	42-5/8	14-1/8	61-7/8	76	66-1/2	68	9	40	11	11-1/8	62	2537

NOTE: Dimensional information shown applies only to Duroflow Blower models.
Refer to Schenck Process drawing DO2384 for dimensional information on other models.